GK53-00012-XXXX
Serial Number 669724 - UP

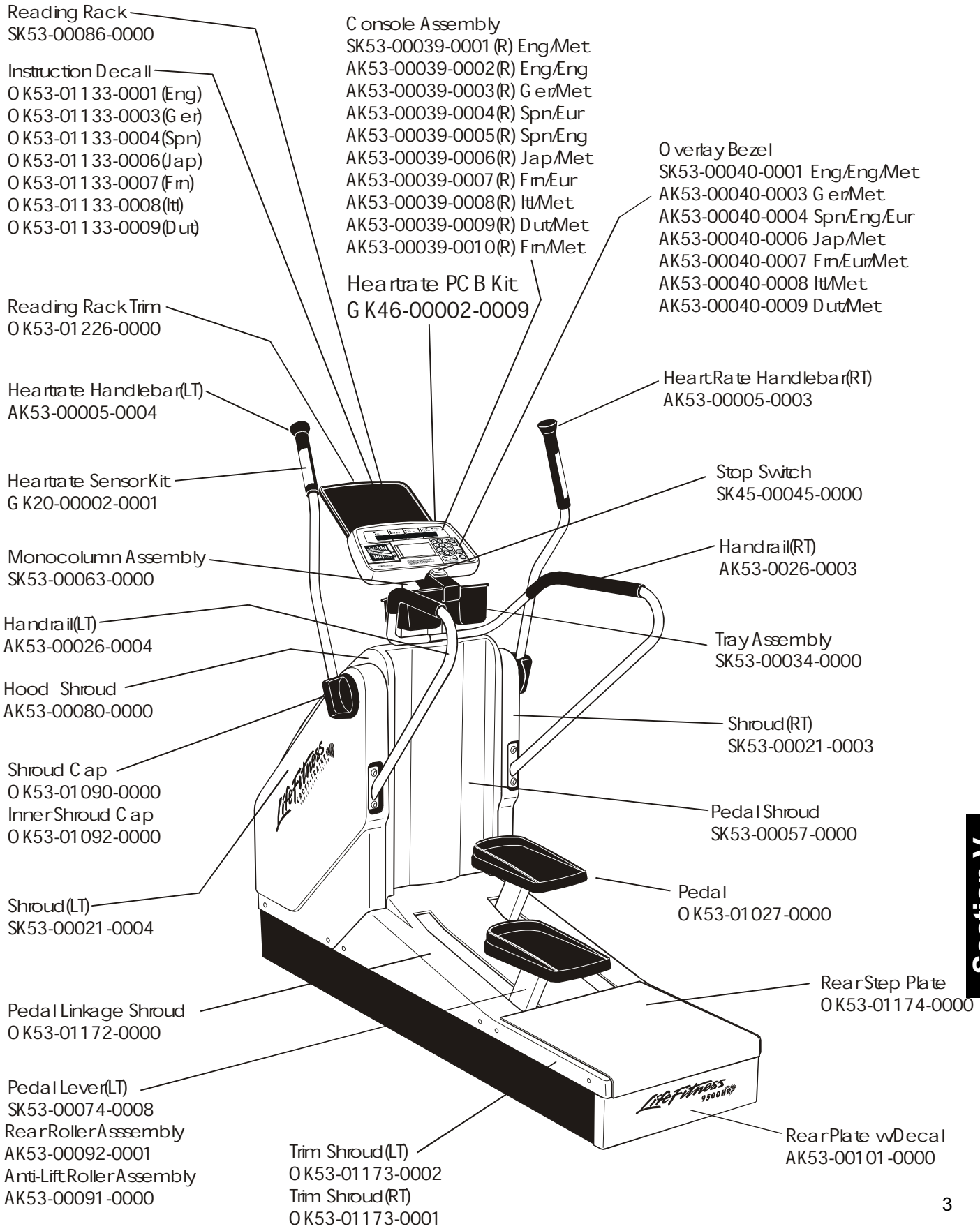

Section V

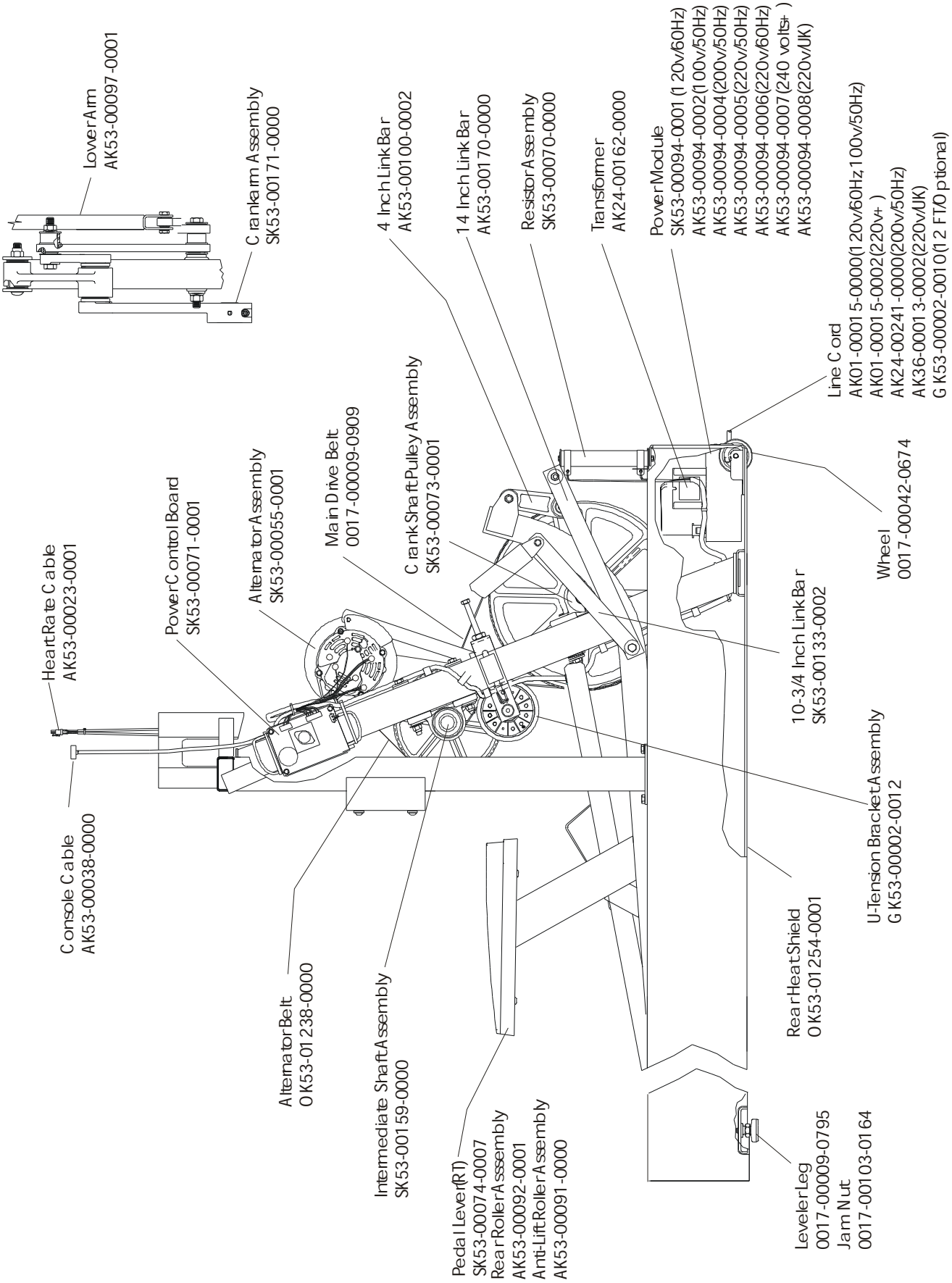
Lower Arm
AK53-00097-0001
Crank arm Assembly
SK53-00171-0000
4 Inch Link Bar
AK53-00100-0002
14 Inch Link Bar
AK53-00170-0000
Resistor Assembly
SK53-00070-0000
Transformer
AK24-00162-0000
Power Module
SK53-00094-0001 (120v/60Hz)
AK53-00094-0002(100v/50Hz)
AK53-00094-0004(200v/50Hz)
AK53-00094-0005(220v/50Hz)
AK53-00094-0006(220v/60Hz)
AK53-00094-0007(240 volts+)
AK53-00094-0008(220v/UK)
Line Cord
AK01-00015-0000(120v/60Hz,100v/50Hz)
AK01-00015-0002(220v+)
AK24-00241-0000(200v/50Hz)
AK36-00013-0002(220v/UK)
GK53-00002-0010(12 FT/Optional)
Wheel
0017-00042-0674
Heart Rate Cable
AK53-00023-0001
Power Control Board
SK53-00071-0001
Alternator Assembly
SK53-00055-0001
Main Drive Belt
0017-00009-0909
Crank Shaft Pulley Assembly
SK53-00073-0001
10-3/4 Inch Link Bar
SK53-00133-0002
Console Cable
AK53-00038-0000
U-Tension Bracket Assembly
GK53-00002-0012
Alternator Belt
OK53-01238-0000
Intermediate Shaft Assembly
SK53-00159-0000
Rear Heat Shield
OK53-01254-0001
Pedal Lever (RT)
SK53-00074-0007
Rear Roller Assembly
AK53-00092-0001
Anti-Lift Roller Assembly
AK53-00091-0000
Leveler Leg
0017-00009-0795
Jam Nut
0017-00103-0164